REV	DESCRIPTION	DATE	CHECK
A1	The Article No. Cup Washer change to G16CW004257	2025/1/2	FDL

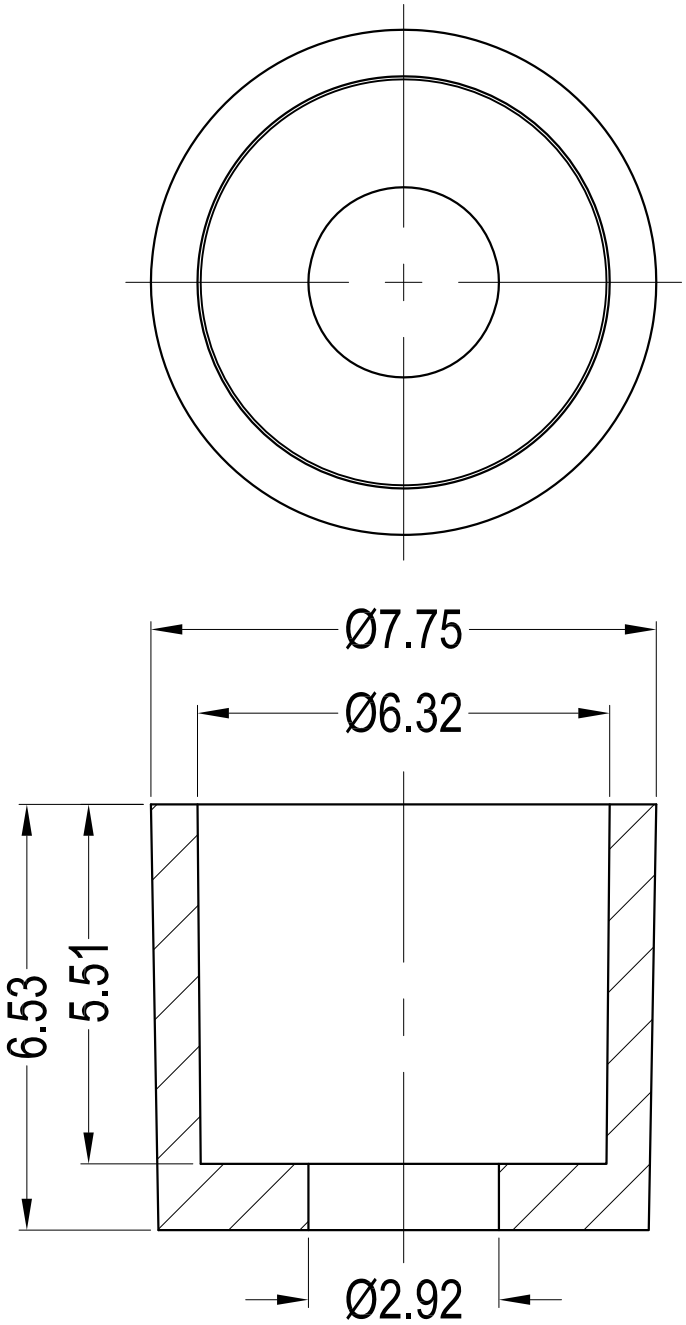

Notes:
1. Material: PA66 UL94 V2;
2. Color: Natural;
3. RoHS Compliant.

Gecko International Co.						DATE	2025-1-2	DIMENSION	TOLERANCE
TITLE	CUP WASHER					SCALE	FIT	L≦4	±0.10
ARTICLE NO.	G16CW004257	MOLD NO.	S0597	DRAW	PLK	UNIT	MM	4 < L≦15	±0.20
PART NO.	40038	MATERIAL	SEE NOTES	DESIGN	PLK	VERSION	A1	15 < L≦50	±0.30
DWG NO.	E4006	COLOR	SEE NOTES	APPROVAL	FDL	VIEW		50 < L≦100	±0.40

A B C D E F