REV	DESCRIPTION	DATE	CHECK
A1	1. GMEG64818901 change to GSMR1098 2. GMEG64818902 change to GSMR2098 3. GMEG64818903 change to GSMR3098 4. GMEG64818904 change to GSMR4098 5. GMEG64818905 change to GSMR5098 6. GMEG64818906 change to GSMR6098 7. GMEG64818907 change to GSMR7098	2023-12-29	FDL

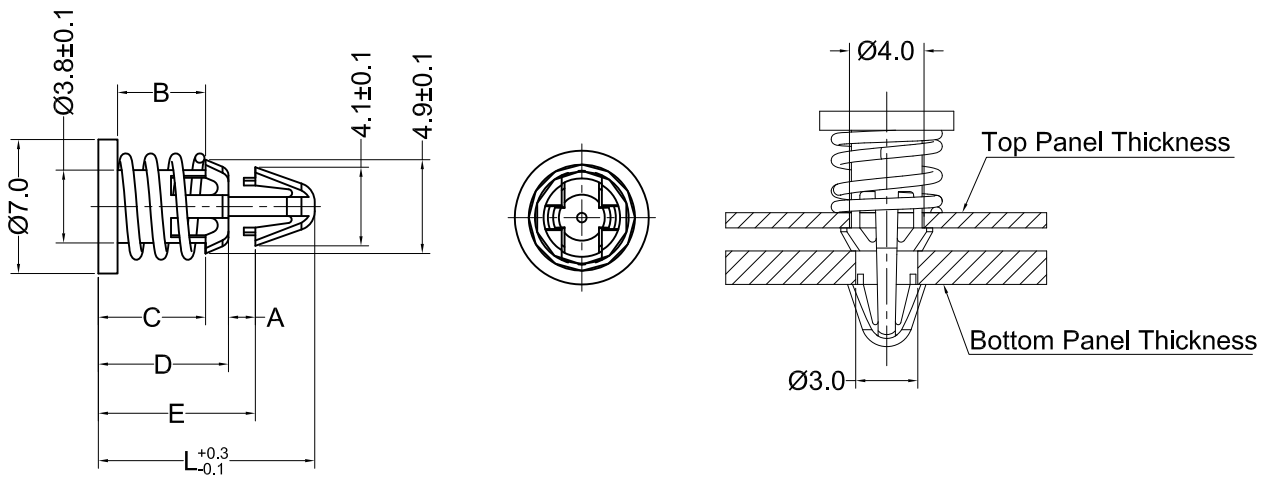

Notes:

1.RoHS Compliant

Part No.	Article No.	Material	Color	L	A	B	C	D	E	Top Panel Thickness	Bottom Panel Thickness	Spring Material
43493	GSMR1098	PA66 UL94 V2	Natural	11.3	1.4	4.6	5.6	6.8	8.2	0.5-2.5	1.2	Steel,Nickel Plated
43494	GSMR2098	PA66 UL94 V2	Black	11.7	1.7	4.6	5.6	6.8	8.5	0.5-2.5	1.6	
43495	GSMR3098	PA66 UL94 V2	Grey	12.2	1.7	5.1	6.1	7.3	9.0	1.0-3.0	1.6	
43496	GSMR4098	PA66 UL94 V2	White	11.3	1.4	4.6	5.6	6.8	8.2	0.5-2.5	1.2	
43583	GSMR5098	PA66 UL94 V2	Yellow	12.2	1.7	5.1	6.1	7.3	9.0	1.0-3.0	1.6	
43584	GSMR6098	PA66 UL94 V2	Brown	11.3	1.4	4.6	5.6	6.8	8.2	0.5-2.5	1.2	
43585	GSMR7098	PA66 UL94 V2	Blue	12.2	1.7	5.1	5.1	7.3	9.0	1.0-3.0	1.6	

Gecko International Co.						DATE	2023-12-29	DIMENSION	TOLERANCE
TITLE	SPRING MOUNT RIVET					SCALE	FIT	L≦4	±0.10
ARTICLE NO.	GSMR1098&7098	MOLD NO.	/	DRAW	PLK	UNIT	MM	4＜L≦15	±0.20
PART NO.	SEE TABLE	MATERIAL	SEE TABLE	DESIGN	PLK	VERSION	A1	15＜L≦50	±0.30
DWG NO.	E4373	COLOR	SEE TABLE	APPROVAL	FDL	VIEW		50＜L≦100	±0.40